Classic III Twin Model

NOTE: ALL DIMENSIONS ARE FOR REFERENCE ONLY.

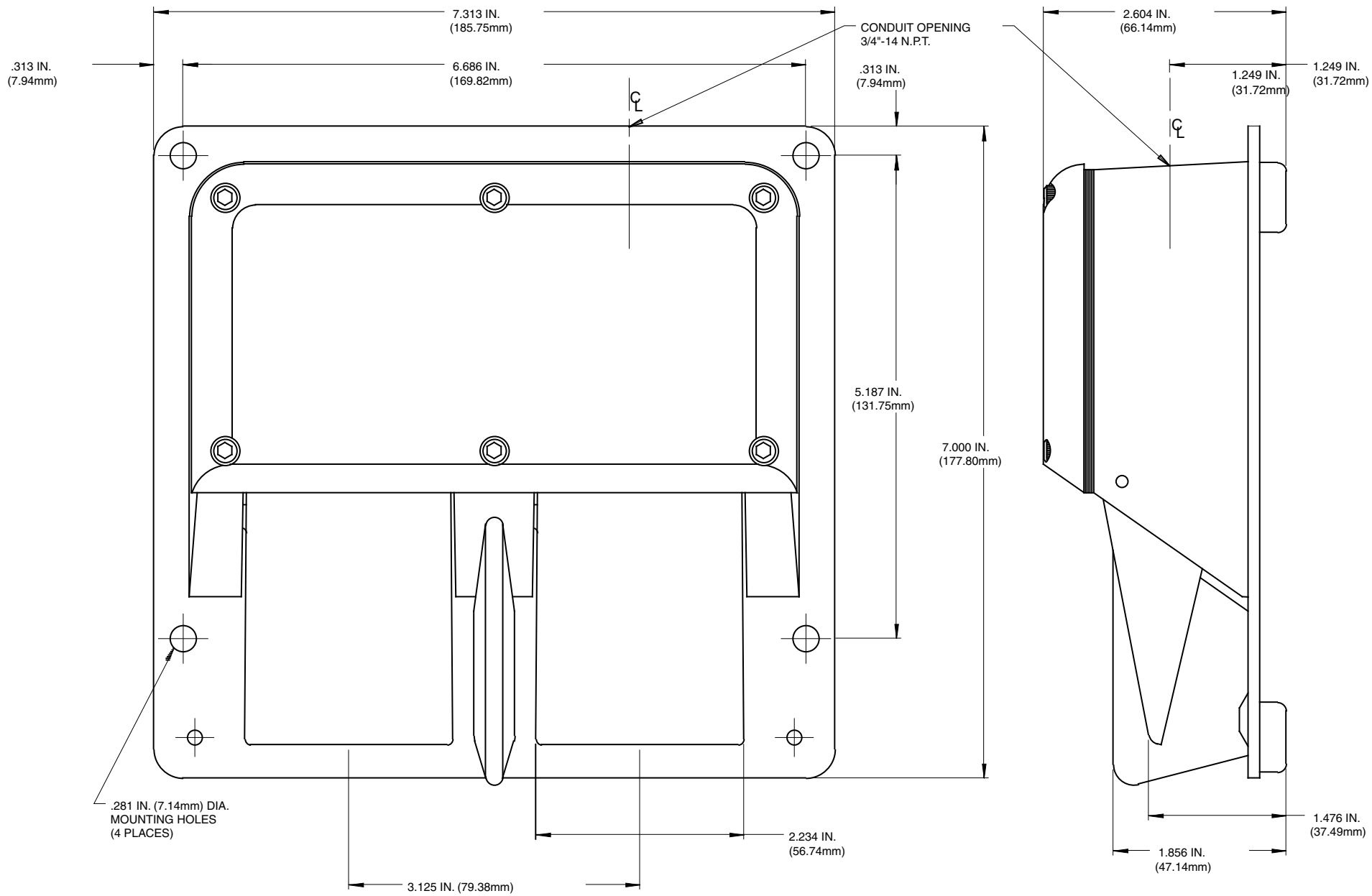

Linemaster Switch Corporation • 29 Plaine Hill Road • P.O. Box 238 • Woodstock, CT 06281-0238 USA
Tel: 860-974-1000 • Fax: 860-974-0691 or 800-974-3668(Toll Free US Only)
sales@linemaster.com • www.linemaster.com